Summary in Graph

Exam Summary (GO Classes CS Test Series 2026 | Theory of Computation | Topic Wise Test 2)

Qs. Attempted:	0 (0 + 0)	Correct Marks:	0 (0 + 0)
Correct Attempts:	0 (0 + 0)	Penalty Marks:	0 (0 + 0)
Incorrect Attempts:	0 (0 + 0)	Resultant Marks:	0 (0 + 0)

Total Questions:	15 (5 + 10)
Total Marks:	25 (5 + 20)
Exam Duration:	45 Minutes
Time Taken:	0 Minutes

Individual Question Statistics

Select Metric: Marks Obtained

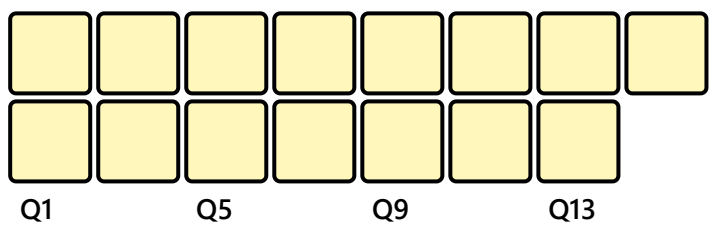

* Average Stats based on first-attempt stats of Top 10% (150) out of 1499 users

EXAM RESPONSE EXAM STATS FEEDBACK

Technical

Q #1 Numerical Type Award: 1 Penalty: 0 Theory of Computation

Let alphabet $\Sigma = \{0, 1\}$. $\Sigma^0 = \{\epsilon\}$, where ϵ is the special empty string with length $|\epsilon| = 0$, and, for integers $k \geq 1, \Sigma^k$ is defined with

$$\Sigma^k = \left\{xy : x \in \Sigma^{k-1} \text{ and } y \in \Sigma\right\}$$

How many strings of length at most 5 belong to Σ^5 ?

Your Answer: | Correct Answer: 32 | Not Attempted | Time taken: 00min 00sec | Discuss

Q #2 | Multiple Choice Type | Award: 1 | Penalty: 0.33 | Theory of Computation

Consider the following statements :

1. If L is a regular language then the set of strings in L of odd length is also a regular language.
2. If L is a regular language then the set of strings in L of even length is also a regular language.

Which of the above statements is/are true?

A. Only 1
B. Only 2
C. Both
D. None

Your Answer: | Correct Answer: C | Not Attempted | Time taken: 00min 00sec | Discuss

Q #3 | Multiple Choice Type | Award: 1 | Penalty: 0.33 | Theory of Computation

Consider the following languages over the alphabet $\{a\}$,

i. $\{w \mid w$ is not a palindrome $\}$
ii. $\{a^k \mid k$ is a multiple of 3$\}$
iii. $\{a^k \mid k$ is prime $\}$

Which of the above languages is/are regular ?

A. Only i
B. Only ii
C. Only ii and iii
D. Only i and ii

Your Answer: | Correct Answer: D | Not Attempted | Time taken: 00min 02sec | Discuss

Q #4 | Multiple Select Type | Award: 1 | Penalty: 0 | Theory of Computation

The regular expression $0^*(10^*)^*$ denotes the same set as

A. $(1^*0)^*1^*$
B. $0 + (0 + 10)^*$
C. $(0 + 1)^*10(0 + 1)^*$
D. $(0 + 1)^*$

Your Answer: | Correct Answer: A;D | Not Attempted | Time taken: 00min 00sec | Discuss

Q #5 | Multiple Choice Type | Award: 1 | Penalty: 0.33 | Theory of Computation

Consider the following program fragment.

```
1. for i:=1 to n do
2.  M[i]:=0
```

Let A represent the initialization $(i := 1)$ in line 1; let B represent the "body" of the loop; i.e., line 2. Let I represent the incrementation of i by 1 implied by line 1, and let T represent the test for $i \leq n$ also implied by line 1.

Which of the following regular expressions represents all possible sequences of steps taken during execution of the fragment, if it is assumed that n is arbitrary and that no abnormal terminations of the loop can occur?

A. $\mathrm{AT(BIT)^*}$
B. $\mathrm{A(TBI)^*}$
C. $\mathrm{A(ITB)^*T}$
D. $\mathrm{(ABIT)^*}$

Your Answer: | Correct Answer: A | Not Attempted | Time taken: 00min 00sec | Discuss

Q #6 | Multiple Choice Type | Award: 2 | Penalty: 0.67 | Theory of Computation

Let $k \geq 2$. Let L be the set of strings in $\{0,1\}^*$ such that $x \in \mathrm{L}$ if and only if the number of 0 's in x is divisible by k and the number of 1 's in x is odd. The minimum number of states in a deterministic finite automaton (DFA) that recognizes L is

A. $k+2$
B. $2k$
C. k^2
D. 2^k

Your Answer: | Correct Answer: B | Not Attempted | Time taken: 00min 00sec | Discuss

Q #7 | Multiple Choice Type | Award: 2 | Penalty: 0.67 | Theory of Computation

In the following, Let $a, b, 0, 1$ be the alphabet symbols. Let $p, q, r, s,$ be some regular expressions.

Consider the pair of regular expressions given below:

I. $0^*(10^*)^*$ & $(1^*0)^*1^*$
II. $(r^* + s^*)$ & $(\mathrm{r} + \mathrm{s})^*$
III. $(a^* + b)^*$ & $(a + b^*)^*$
IV. $(pq)^*p$ & $p(qp)^*$

Which of the above pairs represent equivalent regular expressions?

A. (II) and (I) only
B. (III) & (IV) only
C. (I), (III), (IV) only
D. All of these

Your Answer: | Correct Answer: C | Not Attempted | Time taken: 00min 00sec | Discuss

Q #8 | Numerical Type | Award: 2 | Penalty: 0 | Theory of Computation

Let N be some NFA(Non-Deterministic Finite Automata) with 8 states. Let the cardinality of the input alphabet set be 2. The language accepted by N i.e. $\mathrm{L(N)}$ is Finite. The maximum value of $|\mathrm{L(N)}|$ will be, where $|\mathrm{L(N)}|$ denoted the cardinality of $\mathrm{L(N)}$?

Your Answer: | Correct Answer: 255 | Not Attempted | Time taken: 00min 00sec | Discuss

Q #9 | Multiple Choice Type | Award: 2 | Penalty: 0.67 | Theory of Computation

Consider the following statements:

1. $\{w \in \Sigma^* \mid w \notin L\}$ is regular, where L is some given language which is regular;
2. $\{w \in \Sigma^* \mid w \notin L\}$ is non-regular, where L is some given language which is non-regular;
3. Some infinite subset of the language $\{a^m b^n \mid m \leq n\}$ is regular.

Which of the above statements is true?

A. Only $1, 2$
B. Only 2 and 3
C. Only 1 and 3
D. ALL

Your Answer: | Correct Answer: D | Not Attempted | Time taken: 00min 00sec | Discuss

Q #10 | Multiple Choice Type | Award: 2 | Penalty: 0.67 | Theory of Computation

Consider the following statements :

1. If a deterministic finite automaton M over alphabet Σ accepts all strings of length less than the number of states in M, then it must accept all strings over Σ.
2. If a non-deterministic finite automaton M over alphabet Σ accepts all strings of length less than the number of states in M, then it must accept all strings over Σ.

Which of the above statements is/are correct?

A. Only 1
B. Only 2
C. Both
D. None

Your Answer: | Correct Answer: A | Not Attempted | Time taken: 00min 00sec | Discuss

Q #11 | Numerical Type | Award: 2 | Penalty: 0 | Theory of Computation

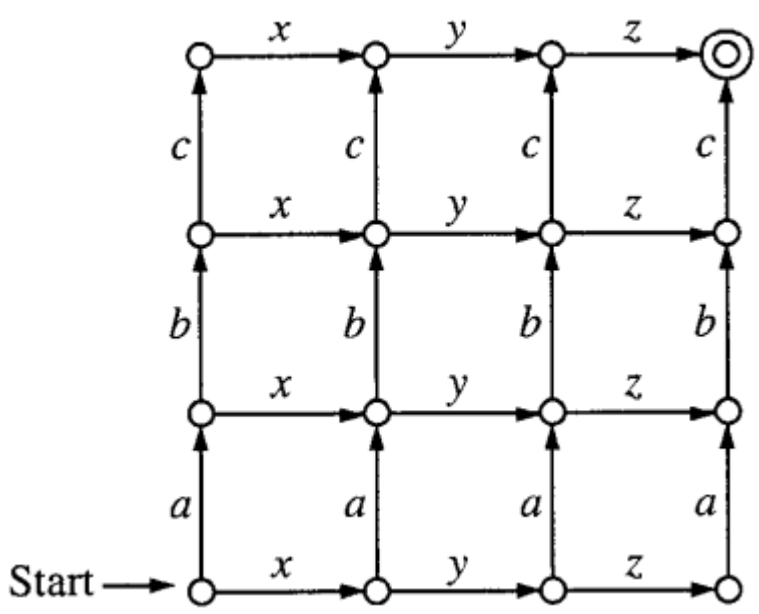

The finite automaton shown above recognizes a set of strings of length 6. What is the total number of strings in the set _____

Your Answer: | Correct Answer: 20 | Not Attempted | Time taken: 00min 00sec | Discuss

Q #12 | Multiple Choice Type | Award: 2 | Penalty: 0.67 | Theory of Computation

Consider the state diagram of a finite automaton (FA) in below figure:

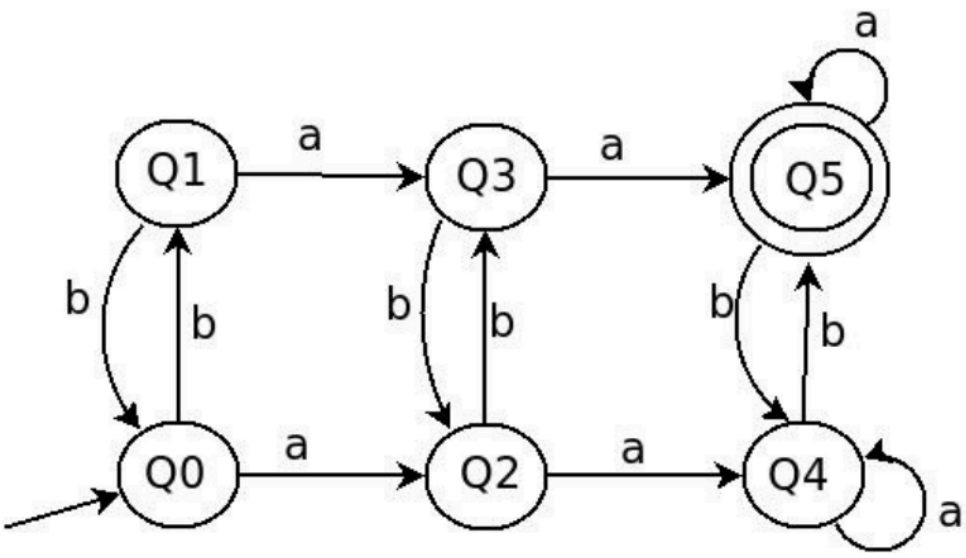

Which of the following language is accepted by the given FA?

A. The set of strings, each containing exactly two $a's$ and an odd number of $b's$.
B. The set of strings, each containing at least two $a's$ and an even number of $b's$.
C. The set of strings, each containing at least two $a's$ and an odd number of $b's$.
D. The set of strings, each containing exactly two $a's$ and an even number of $b's$.

Your Answer: | Correct Answer: C | Not Attempted | Time taken: 00min 00sec | Discuss

Q #13 | Multiple Choice Type | Award: 2 | Penalty: 0.67 | Theory of Computation

Consider the following automaton:

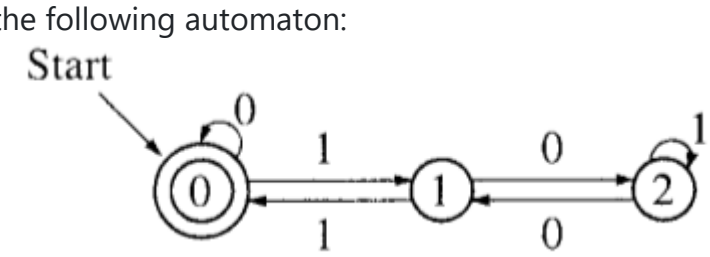

State 0 both the starting state and the accepting state.

Each of the following is a regular expression that denotes a subset of the language recognized by the automaton above EXCEPT

A. $0^*(11)^*0^*$
B. $0^*1(10^*1)^*1$
C. $0^*1(10^*1)^*10^*$
D. $0^*1\,(10^*1)\,0(100)^*$

Your Answer: | Correct Answer: D | Not Attempted | Time taken: 00min 00sec | Discuss

Q #14 | Multiple Choice Type | Award: 2 | Penalty: 0.67 | Theory of Computation

Let us consider functions $f(\mathrm{L}) = \mathrm{M}$, where L and M are languages over the alphabet $\{0, 1\}$. We say the function f is nice if whenever M is regular, L is regular. For example, the function $f(\mathrm{L}) = \mathrm{L}^{\mathrm{R}}$ is nice, because if L^{R} is regular, then L must be regular. In proof, we know that the regular languages are closed under reversal. If L^{R} is regular, then $\left(\mathrm{L}^{\mathrm{R}}\right)^{\mathrm{R}}$, which is L, is also regular. As another example, the function f that

replaces all $1's$ by 0's (and leaves the 0 's as they are) is not nice. For instance, let $\mathrm{L} = \{0^n 1^n \mid n \geq 1\}$. Then $f(\mathrm{L})$ is the language of regular expression $(00)^*$. If f were nice, then since $f(\mathrm{L})$ is regular we could conclude that L is regular, which it isn't.

Consider the following functions :

a. $f(\mathrm{L}) = \mathrm{L} \cup \mathrm{L}\,(0^*)$; that is, f adds to its argument language L all strings of 0's.
b. $f(\mathrm{L})$ is the language formed from L by changing every 0 to 1 and every 1 to 0 (simultaneously). For instance, if $\mathrm{L} = \{001, 10\}$, then $f(\mathrm{L}) = \{110, 01\}$.

Which of the above functions is/are nice?

A. Only a
B. Only b
C. Both
D. None

Your Answer: | **Correct Answer: B** | Not Attempted | Time taken: 00min 00sec | Discuss

Q #15 | Numerical Type | Award: 2 | Penalty: 0 | Theory of Computation

Consider the following regular expression R which describes the language $\mathrm{L}(\mathrm{R})$:

$$(0^*10^*)(10^*10^*)^*$$

How many strings of length 6 over $\{0, 1\}$ belong to $\mathrm{L}(\mathrm{R})$?

Your Answer: | **Correct Answer: 32** | Not Attempted | Time taken: 00min 00sec | Discuss

Copyright & Stuff